EC Series

GMS900C / GMS900CS

Features:

- Excitation system: self-excited (AREP and PMG are optional)
- ATS (automatic transfer switch) receptacle
- Lockable battery isolator switch
- Stainless galvanized zinc plates with strong corrosion resistance
- Vibration isolators between the engine/alternator and base frame
- Integrated wiring design
- Base fuel tank for at least 8 hours running
- Equipped with an industrial muffler
- Engine oil pump
- 50℃ radiator
- Top lifting and steel base frame with forklift holes
- Drainage for fuel tank
- Complete protection functions and safety labels
- IP54 (soundproof sets), IP56 (control system)
- Water jacket preheater, oil heater and double air cleaner, etc. are available.

Output Ratings

Generating Set Model	Prime	Standby
GMS900C/S	900kVA/720kW	990kVA/792kW

Ratings at 0.8 power factor.

Ratings and Performance Data

Engine Make & Model:		KTA38G2A
Alternator Model:		LVI634D
Alternator Brand:		STAMFORD
Control System:		PLC-8610 / PLC-7420
Noise Level@7m:		74.1-84.6
Frequency & Phase:		50Hz & 3PH
Engine Speed: RPM		1500
Structure Type:	GMS900C	A
	GMS900CS	C
Fuel Tank Capacity: L	GMS900C	/
	GMS900CS	1150
Fuel Consumption: l/hr (100% Load)	Prime	191
	Standby	215

Dimensions and Weights

Generating Set Model	Length (L) mm (in)	Width (W) mm (in)	Height (H) mm (in)	Dry kg (lb)
GMS900C	4450	1720	2425	6618
GMS900CS	6058	2438	2725	12120

Dry = With Lube Oil Wet = With Lube Oil and Coolant

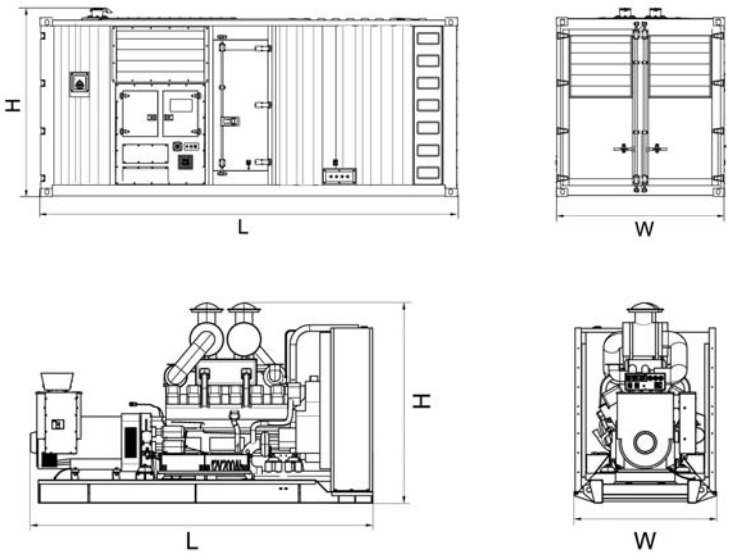

Also available in the following voltages: 415/240V-380/220V-220/127V-200/115V;
ESP: Standby Power Standby duty, operation under variable load, without over load;
PRP: Prime Power-Continuous duty operation, under variable load 24/24h-10% over load permissible 1 hour/12 hours;
The data is only for your reference but not for use of sales.

M: Mechanical speed governor, E/ECU: Electronic speed governor;
NA: Naturally aspirated, TC: Turbocharged, TCA: Turbocharged and air-air aftercooled. TCW: Water-cooled Turbocharged;
The weights are approximate and without fuel .

EC Series

GMS900C / GMS900CS

Engine model: KTA38G2A

GENERAL ENGINE DATA

Type	4 Cycle;V 60°;12 Cylinder
Aspiration	Turbocharged & Aftercooled
Bore - in.(mm) X Stroke - in.(mm)	6.25 (159) X 6.25(159)
Displacement – cu in (litre)	2300 (37.8)
Compression Ratio	14.5:1
Dry Weight	
Fan Hub to Flywheel Engine (Ref. Installation Diagram No.) - lb.(kg)	8200 (3723)
Radiator Cooled Engine (Ref. Installation Diagram No.) - lb.(kg)	8640(3923)
Wet Weight	
Fan Hub to Flywheel Engine (Ref. Installation Diagram No.) - lb.(kg)	8365(3798)
Radiator Cooled Engine (Ref. Installation Diagram No.) - lb.(kg)	8805(3997)
Center of Gravity from Rear Face of flywheel housing FH6017 (Engine Only) – in. (mm)	38.6(980)
Center of Gravity above Crankshaft Centerline (Engine Only) – in. (mm)	11(279)
Moment of Inertia of Rotating Components (Including Flywheel FW6001) – lb-ft ^{2} (kg m ^{2})	248(10.4)
Firing Order	1R-6L-5R-2L-3R-4L-6R-1L-2R-5L-4R-3L

ENGINE MOUNTING

Maximum Allowable Bending Moment at Rear Face of Block - lb.-ft. (N•m)	4500 (6100)
Moment of Inertia About Roll Axis of Complete Engine – lb-ft ^{2} (kg m ^{2})	

EXHAUST SYSTEM

Maximum Allowable Back Pressure – in.Hg (kPa)	3.0 (10)
Exhaust Pipe Size Normally Acceptable in.(mm)	6.0 (152)

AIR INTAKE SYSTEM

Maximum Allowable Intake Air Restriction with Heavy Duty Air Cleaner	
— Clean Element - in. H2O(kPa)	15 (3.73)
— Dirty Element - in. H2O(kPa)	25 (6.25)
Minimum Allowable Dirt Holding Capacity with Heavy Duty Air Cleaner - g/cfm(g-L/s)	25 (53)

COOLING SYSTEM

Coolant Capacity - Engine Only - U.S. gal (litre)	31.2 (118)
- With Heat Exchanger [100℉(38°C)] - U.S. quart (litre)	344 (325)
Maximum Coolant Friction Head External to Engine – PSI(kPa)	5.0 (35)
Maximum Static Head of Coolant Above Engine Crankshaft Centerline ft (m)	25 (7.6)
Maximum Air Restriction Across Radiator – in.H2O (kPa)	0.5 (0.12)
Standard (modulating) Thermostat Range - °F (°C)	180-200 (82-93)
Maximum Coolant Pressure (Exclusive of Pressure Cap) – PSI (kPa)	35 (241)
Minimum Allowable Pressure Cap –PSI (kPa)	10 (69)
Maximum Allowable Top Tank Temperature -°F (°C)	220 (104)
Minimum Recommended Top Tank Temperature -°F (°C)	160 (71)
Minimum Allowable Fill Rate –U.S.GPM(L/min)	5 (18.9)
Maximum Allowable Initial Fill Time –min	5
Minimum Allowable Coolant Expansion Space – % of System Capacity	5
Maximum Allowable Deaeration Time – min	25
Minimum Allowable Drawdown – U.S.quart(litre)	22 (21)

(Drawdown Must Exceed the Volume Not Filled at Initial Fill & Must Not Include Expansion Space)

EC Series

GMS900C / GMS900CS

Engine model: KTA38G2A

LUBRICATION SYSTEM

Normal Operating Oil Pressure Range @ Idle – PSI(kPa)	28(193) Minimun
Rated Speed – PSI(kPa)	43-70 (297-483)
Oil Flow at Rated Speed – U.S.GPM (L/min)	124 (469)
Maximum Allowable Oil Temperature - °F(°C)	250 (121)
Oil Pan Capacity (Option OP6023) High/Low - U.S. gal.(litre)	30-23 (114-87)

FUEL SYSTEM

Type Injection System	Direct Injection Cummins PT	
Maximum Restriction at PT Fuel Injection Pump— with clean fuel filter—in.Hg(mmHg)	4.0	(102)
— with clean fuel filter—in.Hg(mmHg)	8.0	(203)
Maximum Allowable Head on Injector Return Line(Consisting of Friction Head and Static Head) —in.Hg(mmHg)	4.0	(102)
Maximum Fuel Flow to Injection Pump —US gph(liter/hr)	160	(606)

ELECTRICAL SYSTEM

Cranking Motor (Heavy Duty,Positive Engagement) —volt	24
Battery Charging System, Negative Ground —ampere	35
Maximum Allowable Resistance of Cranking Circuit — ohm	0.002
Minimum Recommended Battery Capacity	
- Cold Soak @ 50° F(10℃) and Above – 0°FCCA	1200
- Cold Soak @ 32° F to 50°F(0℃ to 10℃) – 0°FCCA	1280
- Cold Soak @ 0° F to 32°F(-18℃ to 0℃) – 0°FCCA	1800

PERFORMANCE DATA

Minimum Engine Speed –RPM	625
Maximum No-Load Governed Speed –RPM	
Maximum Overspeed Capability –RPM	
Estimum Free Field Sound Pressure Lever	Right Side-dBA
At 3.3 ft(1m) and Full Load Governed Speed	Left Side-dBA
(Excludes Noise From intake, Exhaust,	Front-dBA
Cooing System and Driven Components)	Rear -dBA

Data shown above represent gross engine performance capabilitles obtainsed and corrected in accordance with ISO-3046 conditions of 100kPa (29.53 inHg) baromaetric pressure [110m (361 ft) altitude], 25℃(77°F) air inlet temperature, and relative humidity of 30% with No. 2 diesel or a fuel corresponding to ASTM D2. See reverse side for application rating guidelines.
The fuel consumption data is based on No.2 diesel fuel weight at 0.85kg/litre (7.1lbs/U.S.Gal).
Power output cureves are based on the engine operating with fuel system, water pump and lubricating oil pump; not included are battery charging alternator, fan, option equipment and driven components.

	50HZ		60HZ	
	standby	prime	standby	prime
Engine Speed –RPM	1500	1500	1800	1800
Gross Power Output –BHP (kW)	1200(895)	1090(813)	1350(1007)	1227(915)
Brake Mean Effective Pressure –PSI (kPa)	741(5114)	674(4648)	695(4795)	674(4648)
Piston Speed –ft/min (m/s)	1562 (7.9)	1562 (7.9)	1875(9.5)	1875(9.5)
Motoring Friction Horsepower –HP (kW)	115(86)	115(86)	170(127)	170(127)
Intake Air Flow –CFM (L/s)	2385(1126)	2205(1041)	2900(1369)	2650(1251)
Exhaust Gas Flow (Dry Manifold) –CFM(L/s)	6831(3225)	6218(2936)	7795(3679)	6970(3290)
Exhaust Gas Temperature - Dry Manifold °F(°C)	997(536)	981(527)	935(502)	905(485)
Heat Rejection-to-Ambient (Dry Manifold) —BTU/min(kW)	7741(136)	7058(124)	7720(136)	7015(123)
Heat Rejection-to-Coolant (Dry Manifold) —BTU/min(kW)	31249(549)	28346(626)	31200(548)	28210(496)
Heat Rejection-to-exhuast (Dry Manifold)—BTU/min(kW)	35665(627)	35632(626)	41969(738)	38763(681)
Engine Coolant Flow –U.S.GPM(L/s)	310 (19.6)	310 (19.6)	390(24.6)	390(24.6)

GMS900C / GMS900CS

Alternator model: LVI634D

CONTROL SYSTEM SER.3	SEPARATELY EXCITED BY P.M.G.		
A.V.R.	MX341	MX321	
VOLTAGE REGULATION	± 1.0 %	± 0.5 %	With 4% Engine Governing
SUSTAINED SHORT CIRCUIT	REFER TO SHORT CIRCUIT DECREMENT CURVES (page 7)		

INSULATION SYSTEM	CLASS H	
PROTECTION	IP23	
RATED POWER FACTOR	0.8	
STATOR WINDING	DOUBLE LAYER LAP	
WINDING PITCH	TWO THIRDS	
WINDING LEADS	6	
STATOR WDG. RESISTANCE (L-L)	0.003 Ohms PER PHASE AT 22°C STAR CONNECTED	
ROTOR WDG. RESISTANCE	1.74 Ohms at 22°C	
R.F.I. SUPPRESSION	BS EN 61000-6-2 & BS EN 61000-6-4,VDE 0875G, VDE 0875N. refer to factory for others	
WAVEFORM DISTORTION	NO LOAD < 1.5% NON-DISTORTING BALANCED LINEAR LOAD < 5.0%	
MAXIMUM OVERSPEED	2250 Rev/Min	
BEARING DRIVE END	BALL. 6228 (ISO)	
BEARING NON-DRIVE END	BALL. 6319 (ISO)	
	1 BEARING	2 BEARING
WEIGHT COMP. GENERATOR	2233 kg	2240 kg
WEIGHT WOUND STATOR	947 kg	947 kg
WEIGHT WOUND ROTOR	822 kg	778 kg
WR² INERTIA	18.6963 kgm^2	18.1529 kgm^2
SHIPPING WEIGHTS in a crate	2328 kg	2329 kg
PACKING CRATE SIZE	183 x 92 x 140 (cm)	183 x 92 x 140 (cm)

	50 Hz				60 Hz			
TELEPHONE INTERFERENCE	THF<2%				TIF<50			
COOLING AIR	2.18 m³/sec 4619 cfm				2.63 m³/sec 5573 cfm			
VOLTAGE STAR (Y)	380/220	400/231	415/240	440/254	416/240	440/254	460/266	480/277
kVA BASE RATING FOR REACTANCE VALUES	865	910	910	825	986	1043	1090	1138
Xd DIR. AXIS SYNCHRONOUS	2.83	2.69	2.50	2.02	3.23	3.05	2.92	2.80
X'd DIR. AXIS TRANSIENT	0.15	0.14	0.13	0.10	0.17	0.16	0.15	0.14
X"d DIR. AXIS SUBTRANSIENT	0.10	0.10	0.09	0.07	0.12	0.11	0.10	0.10
Xq QUAD. AXIS REACTANCE	2.35	2.23	2.07	1.67	2.68	2.53	2.42	2.32
X"q QUAD. AXIS SUBTRANSIENT	0.27	0.26	0.24	0.19	0.31	0.29	0.28	0.27
X_L LEAKAGE REACTANCE	0.07	0.06	0.06	0.05	0.08	0.07	0.07	0.07
X_2 NEGATIVE SEQUENCE	0.19	0.18	0.16	0.13	0.21	0.20	0.19	0.18
X_0 ZERO SEQUENCE	0.03	0.03	0.03	0.02	0.03	0.03	0.03	0.03

REACTANCES ARE SATURATED	VALUES ARE PER UNIT AT RATING AND VOLTAGE INDICATED
T'd TRANSIENT TIME CONST.	0.092 s
T"d SUB-TRANSTIME CONST.	0.013 s
T'do O.C. FIELD TIME CONST.	3 s
Ta ARMATURE TIME CONST.	0.032 s
SHORT CIRCUIT RATIO	1/Xd

GMS900C / GMS900CS

Control System

PLC-7420

PLC-7420 is an advanced control module based on micro-processor, containing all necessary functions for protection of the genset and the breaker control. It can monitor the mains supply, breaker control. and automatically start the engine when the mains is abnormal. Accurately measure various operational parameters and display all values and alarms information on the LCD. In addition, the control module can automaticallyshut down the engine and indicate the engine failure.

FEATURES

- Microprocessor control, with high stability and credibility
- Monitoring and measuring operational parameters of the mains supply and genset
- Indicating operation status, fault conditions, all parameters and alarms
- Multiple protections; multiple parameters display, like pressure, temp. etc.
- Manual, automatic and remote work mode selectable
- Real time clock for time and date display, overall runtime display, 250 log entries
- Overall power output display
- Integral speed/frequency detecting, telling status of start, rated operation, overspeed etc.
- Communication with PC via RS485 OR RS232 interface, using MODBUS protocol

a Button (next page)

b Button (increase value / previous item)

c Button (accept)

d Button (previous page)

e Button (decrease value / next item)

f Button (transfer the load to the mains supply, when in Manual mode only)

g Mains supply available LED

h Stop / Reset button

i Manual button (Manual control mode)

j Mains supply on load LED

k Test button (Test mode) l Auto button (Auto mode)

m Genset on load LED n Mute/Lamp test button

o Start button (Manual) p Genset available LED

q Button (transfer the load to the genset, when in Manual mode only)

r Alarm LED (4 alarm items)

s LCD display

t Control module name

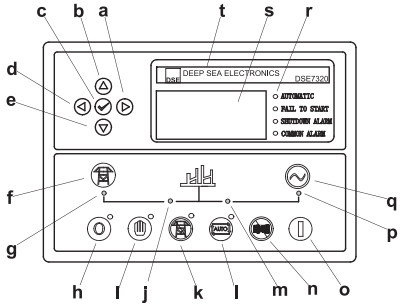

Control Panel

Control System function list

		MODEL	PLC-8610	PLC-7420
General accessory		AVR	●	●
		Electronic Governing	●	×
		Glow plug control	●	●
		Cycle Cranking	●	●
		(MODBUS) Networking	●	●
		Fault History	●	●
Operator Interface		manual start/stop	●	●
		Auto/remote start	●	●
		Regular Test	●	●
		Auto operation LED	●	●
		Manual operation LED	●	●
		Common Shutdown LED	●	●
		Common warning LED	●	●
		Fail to start LED	●	●
		Emergency stop(local)	●	●
		Alphanumeric screen	●	●
		Remote start input active LED	●	●
		Alarm reset	●	●
Measurement and Instrumentation	Engine	Oil pressure	●	●
		Water Temperture	●	●
		Engine Speed	●	●
		Hours Run	●	●
		Number of Starts	●	●
		Battery Voltage	●	●
		Coolant Temperature	●	●
	Alternator	3Phase-L Voltage&Frequency	●	●
		3phase Current	●	●
		Frequency	●	●
		kWh	●	●
		Apparent Power	●	●
		Active Power and Reactive Power	●	●
		Power Factor	●	●
		Per PhasekW, kWr	●	●
		Per Phase kVA	●	●
		Phase Voltage	●	●
		Output Power	●	●
	Mains Expression	Grid Line Voltage	●	●
		Grid Phase Voltage	●	●
		Grid Frequency	●	●
Shutdown Protection and Indication	Engine	Low Fuel Level	●	●
		High Fuel Level	○	○
		Low Oil Pressure	●	●
		High Water Temperature	●	●
		Failure to Stop	●	●
		Failure to Start	●	●
		Controlable start circles/times	●	●
		Overspeed	●	●
	Alternator	Under&Over Voltage	●	●
		Under&Over Frequency	●	●
		Overcurrent	●	●
		Earth Leakage	○	○
		Reverse Power	●	×
		Reverse kWr	●	×
Threshold Warning&Indication		Low Oil Pressure	●	●
		Low Water Temperature	○	○
		High Water Temperature	●	●
		Low Water Level	●	●
		Low/High Battery Voltage	●	●
		Failure to Charge	●	●
		Overcurrent	●	●
		Overload	●	●
		Genset Under/Over Voltage	●	●
		Genset Under/Over Frequency	●	●
		under/over Speed	●	●
		High Engine Temperature	●	●
		Earth Leakage	●	●
Paralleling Capability		Synchroscope(Independent Bus)	●	×
		Active and Reactive Power Control	●	×
		Synchroscope(Shared Bus)	●	×
		Synchronization Dector	●	×
		Peak Lopping	○	×
Power Transfer Function		Automatic Transfer	●	●
		Hard Closed Transition	●	●
		Soft Closed Transtion	●	×
		Gen/Mains Breaker	×	●
		Gen/Mains Breaker Status Protection	×	●
		Speed/Voltage Control	●	×
		Power Indication	●	●
		Fuel&Solenoid Valve Control	●	●
		Startor Control	●	●
		Preheating	○	○
		Mains Transfer Switch (Standard)	●	●
		Mains Transfer Switch (Emergency)	●	●
Environment		Operating Temperature (-40℃-70℃)	●	●
		Ambient Temperature (-25℃-45℃)	●	●
		Humidity≤80%	●	●
Monitoring Function		Grid Over/Under Voltage Control	●	●
		Grid Over/Under Frequency Control	●	●
		Remote Start Output(Load/No-load)	●	●
		Optional Relay Output	●	●
		Remote Telecom Control with All Functions	●	●
		Engine Instrument Monitoring	●	●
		Alternator Output Instrument Monitoring	●	●
		Connection Point with All-around Setting For 6 Users	●	●
		3 Users Input Connection Point	●	●
		LCD Light Control of Low Light Operation Environment	●	●
		Safe PIN Code	●	●
		RS232/485 Interface	●	●
		Language Selection	●	●
		Multi-Language Function	●	

● Standard ○ Optional × Impossible

EC Series

GMS900C / GMS900CS

Control System

Digital, intelligent control system allows easier operation.

PLC-8610 (Optional)

PLC-8610 is a microprocessor based control unit containing all necessary functions for protection of the genset and the breaker control. Furthermore, it contains all necessary three-phase measuring circuits and presents all values and alarms on the LCD display. The module has the function of load sharing which enables the module to share the active load (kW) equally when operating in parallel with other gensets. The load sharing is performed so each genset takes a portion of the load that is calculated in percent according to the nominal power.

FEATURES

- Microprocessor control, with high stability and credibility
- Monitoring and measuring operational parameters of the genset
- Indicating operation status, fault conditions, all parameters and alarms
- Multiple protections; multiple parameters display, like pressure, temp. etc.
- Manual, automatic and remote work mode selectable
- RS232 & RS485 can be used at the same time
- Real time clock for time and date display, overall runtime display, 250 log entries

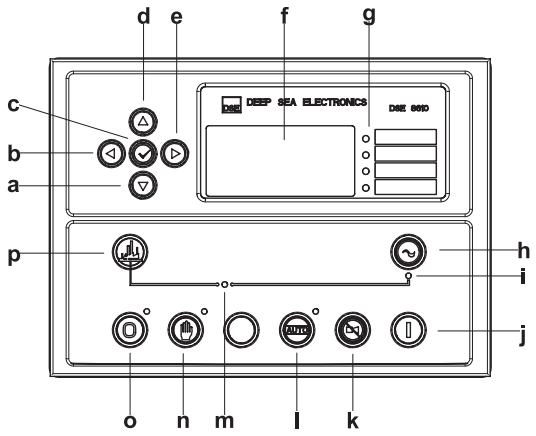

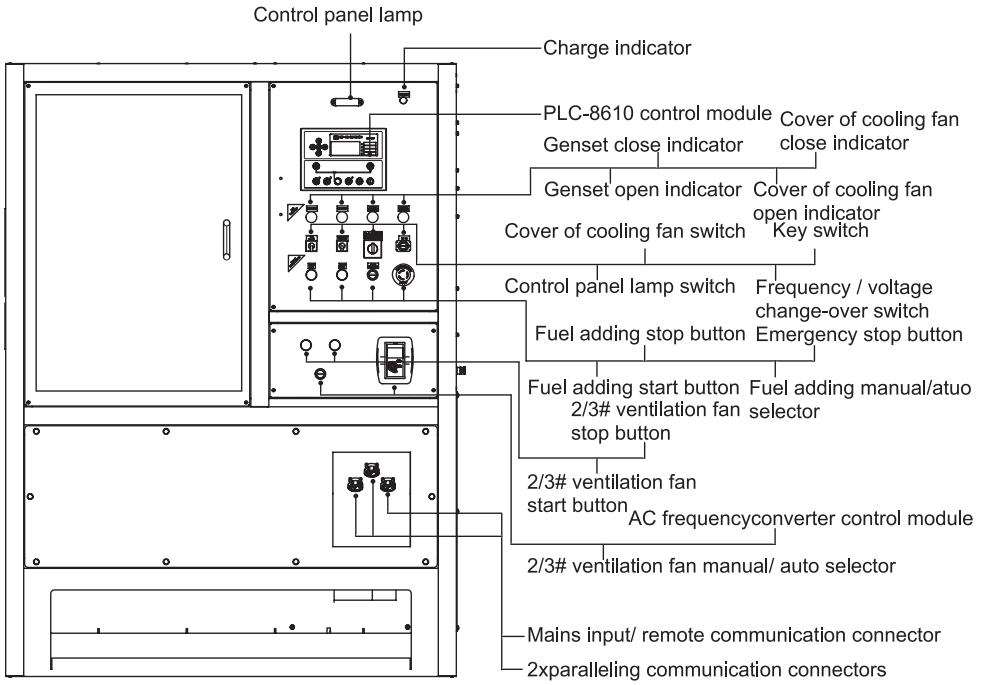

a Decrease value next item
b Previous page
c Accept
d Increase value previous item
e Next page
f LCD display
g Four alarm LEDs
h Close genset
i Genset available LED
j Manual start
k Mute alarm / lamp test
l Auto mode (with LED)
m Genset breaker on LED
n Manual mode (with LED)
o Stop / reset (with LED)
p Open genset

GMS900C / GMS900CS

Optional

Engine	Alternator	Generator Set	Fuel System	Canopy
• Water Jacket Preheater • Oil Preheater	• Winding Temperature Measuring Instrument • Alternator Preheater • PMG • Anti-damp and anti-corrosion treatment • Anti-condensation heater	• Tools with the machine	• Low fuel level alarm • Automatic fuel feeding system • Fuel T-valves	

Lubricating System	Exhaust System	Cooling System	Control Panel	Voltages
• Oil with the machine	• Protection board from hotness	• Front heat protection • Coolant (-30°C)	• Remote control panel • PLC-8610 • PLC-7420 • ATS	• 415/240V • 400/230V • 380/220V • 220/127V • 200-115V

PowerLink reserves the right to make changes in model, technical sepcification, color, configuration and accessories without prior notice. Please contact the salesman before ordering.