EC Series

GMS800C / GMS800CS

Features:

- Excitation system: self-excited (AREP and PMG are optional)
- ATS (automatic transfer switch) receptacle
- Lockable battery isolator switch
- Stainless galvanized zinc plates with strong corrosion resistance
- Vibration isolators between the engine/alternator and base frame
- Integrated wiring design
- Base fuel tank for at least 8 hours running
- Equipped with an industrial muffler
- Engine oil pump
- 50℃ radiator
- Top lifting and steel base frame with forklift holes
- Drainage for fuel tank
- Complete protection functions and safety labels
- IP54 (soundproof sets), IP56 (control system)
- Water jacket preheater, oil heater and double air cleaner, etc. are available.

Output Ratings

Generating Set Model	Prime	Standby
GMS800C/S	800kVA/640kW	880kVA/704kW

Ratings at 0.8 power factor.

Ratings and Performance Data

Engine Make & Model:		KTA38-G2B
Alternator Model:		LVI634C
Alternator Brand:		STAMFORD
Control System:		PLC-8610 / PLC-7420
Noise Level@7m:		73.9-84.4
Frequency & Phase:		50Hz & 3PH
Engine Speed: RPM		1500
Structure Type:	**GMS800C**	A
	GMS800CS	C
Fuel Tank Capacity: L	**GMS800C**	/
	GMS800CS	1150
Fuel Consumption: l/hr (100% Load)	**Prime**	125
	Standby	154

Dimensions and Weights

Generating Set Model	Length (L) mm (in)	Width (W) mm (in)	Height (H) mm (in)	Dry kg (lb)
GMS800C	4440	1720	2425	6607
GMS800CS	6058	2438	2725	12085

Dry = With Lube Oil Wet = With Lube Oil and Coolant

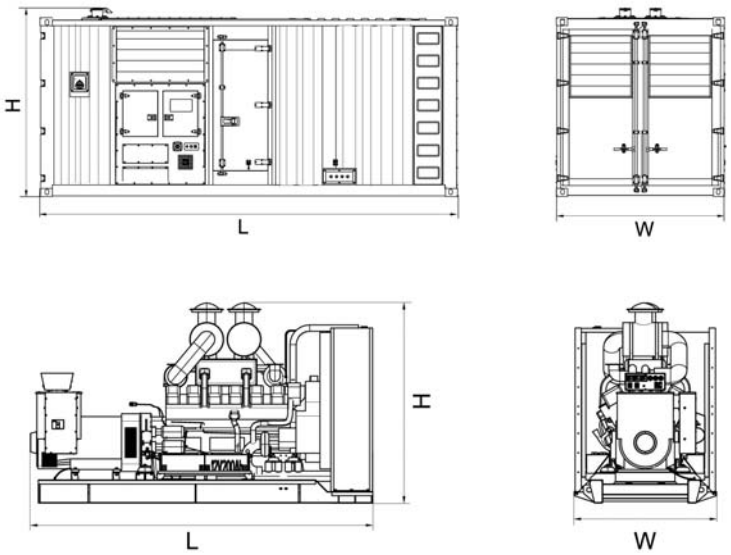

Also available in the following voltages: 415/240V-380/220V-220/127V-200/115V;
ESP: Standby Power Standby duty, operation under variable load, without over load;
PRP: Prime Power-Continuous duty operation, under variable load 24/24h-10% over load permissible 1 hour/12 hours;
The data is only for your reference but not for use of sales.

M: Mechanical speed governor, E/ECU: Electronic speed governor;
NA: Naturally aspirated, TC: Turbocharged, TCA: Turbocharged and air-air aftercooled. TCW: Water-cooled Turbocharged;
The weights are approximate and without fuel .

EC Series

GMS800C / GMS800CS

Engine model: KTA38-G2B

GENERAL ENGINE DATA

Type	4-Cycle;V 60°;12-Cylinder	
Aspiration	TB & AC	
Bore × Stroke - in.×in. (mm×mm)	6.25 × 6.25	(159 × 159)
Displacement - $in.^3$(L)	2300	(37.8)
Compression Ratio	14.5:1	
Firing Order	1R-6L-5R-2L-3R-4L-6R-1L-2R-5L-4R-3L	
Dry Weight		
--Engine Only - lb. (kg)	7950	(3609)
--Fan to Flywheel Engine - lb. (kg)	8200	(3723)
Wet Weight		
--Engine Only - lb. (kg)	8450	(3836)
--Fan to Flywheel Engine - lb. (kg)	8700	(3950)
Moment of Inertia of Rotating Components - $lb.\cdot ft.^2$ ($kg\cdot m^2$)	248	(10.4)
Center of Gravity from Rear Face of Flywheel Housing - in.(mm)	38.6	(980)
Center of Gravity Above Crankshaft Centerline - in.(mm)	11	(279)

ENGINE MOUNTING

Maximum Allowable Bending Moment at Rear Face of Block - lb.·ft. (N·m)	4500	(6100)

EXHAUST SYSTEM

Maximum Allowable Back Pressure - in.Hg (kPa)	3	(10)

AIR INDUCTION SYSTEM

Maximum Allowable Intake Air Restriction		
-- With Light Duty Clean Filter Element - in. H_2O (kPa)	10	(2.49)
-- With Heavy Duty Clean Filter Element - in. H_2O (kPa)	15	(3.74)
-- With Dirty Filter Element - in. H_2O (kPa)	25	(6.22)
Maximum Intake Pressure Fall from Turbo to Intake Manifold - PSI (kPa)	5	(17)
Maximum Allowable Intake Manifold Inlet Temperature - °F (°C)	122 - 140	(50-60)

COOLING SYSTEM

Coolant Capacity - Engine Only - U.S. gal (L)	31.2	(118)
- With Heat Exchanger - U.S. gal (L)	13	(49.2)
Maximum Coolant Friction Head External to Engine - 1800 rpm - PSI (kPa)	N/A	
- 1500 rpm - PSI (kPa)	7	(48)
Maximum Static Head of Coolant Above Engine Crank Centerline -ft. (m)	60	(18.3)
Standard Thermostat (Modulating) Range - °F (°C)	180 - 202	(82 - 94)
Minimum Allowable Pressure Cap -PSI (kPa)	10	(69)
Maximum Allowable Top Tank Temperature for Standby / Prime Power - °F (°C)	220 / 212	(104 / 100)

LUBRICATION SYSTEM

Oil Pressure @ Idle Speed - PSI (kPa)	20 Min	(138) Min
@ Governed Speed - PSI (kPa)	43 - 70	(296 - 483)
Maximum Allowable Oil Temperature - °F (°C)	250	(121)
Oil Pan Capacity - Low / High - U.S. gal. (L)	23 / 30	(87 / 114)
Total System Capacity - U.S. gal. (L)	135	(35.7)
Angularity of Oil Pan - Front Down/Front Up/Side to Side	30°/30°/30°	

POWERINK Power Systems

EC Series

GMS800C / GMS800CS

Engine model: KTA38-G2B

FUEL SYSTEM

Type Injection System	Direct Injection Cummins PT	
Maximum Allowable Restriction to Fuel Pump		
-- With Clean Fuel Filter - in.Hg (kPa)	4	(13.5)
-- With Dirty Fuel Filter - in.Hg (kPa)	8	(27.1)
Maximum Allowable Head on Injector Return Line - in.Hg (kPa)	6.5	(22)
Maximum Fuel Pump Supply - U.S.gal/h (L)	132	(500)
Fuel Temperature Range °F (°C)	90 - 110	(32 - 43)
Maximum Allowable Fuel Temperature °F (°C)	160	(71)

ELECTRICAL SYSTEM

Minimum Recommended Battery Capacity (24V)	
-- Cold Soak @ 50 °F (10 °C) and Above - 0°F CCA	1200
-- Cold Soak @ 32 °F to 50 °F (0 °C to 10 °C) - 0°F CCA	1280
-- Cold Soak @ 0 °F to 32 °F (-18 °C to 0 °C) - 0°F CCA	1800
Maximum Allowable Resistance of Cranking Circuit - ohm	0.002
Standard Cranking Motor (Heavy Duty , Positive Engagement） - volt	24

PERFORMANCE DATA

Idle Speed - r/min	575 - 650
Maximum No-Load Governed Speed - r/min	1760

All data is based on :

--Engine Operating with fuel system, water pump, lubricating oil pump, air cleaner and exhaust silencer, fan, and optional driven components.

--Engine operating with fuel corresponding to grade No.2-D per **ASTM D975**.

--Ratings are based upon **ISO 8665** reference conditions; air pressure of 100kPa [29.612 in. Hg] air temperature 25°C [77°F] and 30% relative humidity. Power is rated in accordance with IMCI prodedures.

--**ISO 3046**, Part1, Standard Reference Conditions of : Barometric Pressure:100kPa(29.5in.Hg); Altitude: 110m (361ft.); Air Temperature: 25°C (77°F) ; Relative Humidity: 30% .

Revision should not imformed.

--This Data Sheet includes both air-cooled (Fan/Radiator) & raw water cooled (Heatexchanger/Raw Water Pump) type engine.

-- ** Only for fan cooled engine.

-- *** Only for heatexchanger cooled engine.

N.A. - Data is Not Available; N/A - Not Applicable to this Engine; TBD - To Be Determined

	PRIME POWER		STANDBY POWER	
	50Hz		50Hz	
Governed Engine Speed - r/min	1500		1500	
Gross Engine Power Output - HP (kW)	953	(711)	1057	(789)
Torque lb.·ft. (N·m)	3338	(4527)	3704	(5023)
Brake Mean Effective Pressure - PSI (kPa)	589	(4063)	653	(4509)
Piston Speed - ft./min (m/s)	1500	(7.6)	1500	(7.6)
Friction Horsepower - HP (kW)	115	(86)	115	(86)
Intake Air Flow - CFM (L/s)	1963	(926)	2080	(982)
Engine Water Flow - GPM (L/s)	345	(21.8)	345	(21.8)
Fuel Consumption - U.S.gal/h (L/h)	33	(125)	40.7	(154)
Exhaust Gas Temperature (After Turbine) - °F (°C)	878	(470)	891	(477)
Exhaust Gas Flow (After Turbine) - CFM (L/s)	4769	(2251)	5102	(2408)
Heat Radiation - BTU (kW)	5980	(105)	6660	(117)
Heat Rejection to Coolant - BTU (kW)	23910	(420)	26580	(467)
Heat Rejection to Ambient - BTU (kW)	29880	(525)	33240	(584)

Alternator model: LVI634C

CONTROL SYSTEM SER.3	SEPARATELY EXCITED BY P.M.G.		
A.V.R.	MX341	MX321	
VOLTAGE REGULATION	± 1.0 %	± 0.5 %	With 4% Engine Governing
SUSTAINED SHORT CIRCUIT	REFER TO SHORT CIRCUIT DECREMENT CURVES (page 7)		

INSULATION SYSTEM	CLASS H							
PROTECTION	IP23							
RATED POWER FACTOR	0.8							
STATOR WINDING	DOUBLE LAYER LAP							
WINDING PITCH	TWO THIRDS							
WINDING LEADS	6							
STATOR WDG. RESISTANCE (L-L)	0.0034 Ohms PER PHASE AT 22°C STAR CONNECTED							
ROTOR WDG. RESISTANCE	1.66 Ohms at 22°C							
R.F.I. SUPPRESSION	BS EN 61000-6-2 & BS EN 61000-6-4,VDE 0875G, VDE 0875N. refer to factory for others							
WAVEFORM DISTORTION	NO LOAD < 1.5% NON-DISTORTING BALANCED LINEAR LOAD < 5.0%							
MAXIMUM OVERSPEED	2250 Rev/Min							
BEARING DRIVE END	BALL. 6228 (ISO)							
BEARING NON-DRIVE END	BALL. 6319 (ISO)							
	1 BEARING				2 BEARING			
WEIGHT COMP. GENERATOR	2076 kg				2120 kg			
WEIGHT WOUND STATOR	907 kg				907 kg			
WEIGHT WOUND ROTOR	788 kg				744 kg			
WR² INERTIA	17.652 kgm^2				17.1086 kgm^2			
SHIPPING WEIGHTS in a crate	2173 kg				2200 kg			
PACKING CRATE SIZE	183 x 92 x 140 (cm)				183 x 92 x 140 (cm)			
	50 Hz				60 Hz			
TELEPHONE INTERFERENCE	THF<2%				TIF<50			
COOLING AIR	2.18 m³/sec 4619 cfm				2.63 m³/sec 5573 cfm			
VOLTAGE STAR (Y)	380/220	400/231	415/240	440/254	416/240	440/254	460/266	480/277
kVA BASE RATING FOR REACTANCE VALUES	760	800	800	725	865	916	958	1000
Xd DIR. AXIS SYNCHRONOUS	2.69	2.56	2.38	1.92	3.07	2.91	2.79	2.67
X'd DIR. AXIS TRANSIENT	0.15	0.14	0.13	0.11	0.17	0.16	0.16	0.15
X"d DIR. AXIS SUBTRANSIENT	0.11	0.10	0.10	0.08	0.12	0.12	0.11	0.11
Xq QUAD. AXIS REACTANCE	2.24	2.13	1.98	1.60	2.56	2.42	2.32	2.22
X"q QUAD. AXIS SUBTRANSIENT	0.27	0.25	0.24	0.19	0.30	0.28	0.27	0.26
X_L LEAKAGE REACTANCE	0.08	0.08	0.07	0.06	0.09	0.09	0.08	0.08
X_2 NEGATIVE SEQUENCE	0.19	0.18	0.17	0.13	0.22	0.21	0.20	0.19
X_0 ZERO SEQUENCE	0.03	0.03	0.03	0.02	0.03	0.03	0.03	0.03
REACTANCES ARE SATURATED	VALUES ARE PER UNIT AT RATING AND VOLTAGE INDICATED							
T'd TRANSIENT TIME CONST.	0.099 s							
T"d SUB-TRANSTIME CONST.	0.013 s							
T'do O.C. FIELD TIME CONST.	2.95 s							
Ta ARMATURE TIME CONST.	0.034 s							
SHORT CIRCUIT RATIO	1/Xd							

GMS800C / GMS800CS

Control System

PLC-7420

PLC-7420 is an advanced control module based on micro-processor, containing all necessary functions for protection of the genset and the breaker control. It can monitor the mains supply, breaker control. and automatically start the engine when the mains is abnormal. Accurately measure various operational parameters and display all values and alarms information on the LCD. In addition, the control module can automaticallyshut down the engine and indicate the engine failure.

FEATURES

- Microprocessor control, with high stability and credibility
- Monitoring and measuring operational parameters of the mains supply and genset
- Indicating operation status, fault conditions, all parameters and alarms
- Multiple protections; multiple parameters display, like pressure, temp. etc.
- Manual, automatic and remote work mode selectable
- Real time clock for time and date display, overall runtime display, 250 log entries
- Overall power output display
- Integral speed/frequency detecting, telling status of start, rated operation, overspeed etc.
- Communication with PC via RS485 OR RS232 interface, using MODBUS protocol

a Button (next page)

b Button (increase value / previous item)

c Button (accept)

d Button (previous page)

e Button (decrease value / next item)

f Button (transfer the load to the mains supply, when in Manual mode only)

g Mains supply available LED

h Stop / Reset button

i Manual button (Manual control mode)

j Mains supply on load LED

k Test button (Test mode) l Auto button (Auto mode)

m Genset on load LED n Mute/Lamp test button

o Start button (Manual) p Genset available LED

q Button (transfer the load to the genset, when in Manual mode only)

r Alarm LED (4 alarm items)

s LCD display

t Control module name

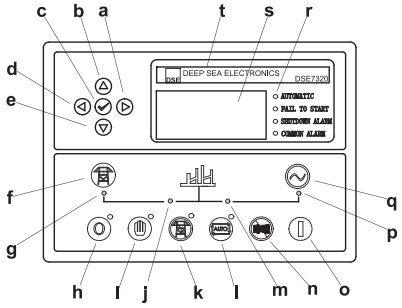

Control Panel

Control System function list

		MODEL	PLC-8610	PLC-7420
General accessory		AVR	●	●
		Electronic Governing	●	×
		Glow plug control	●	●
		Cycle Cranking	●	●
		(MODBUS) Networking	●	●
		Fault History	●	●
Operator Interface		manual start/stop	●	●
		Auto/remote start	●	●
		Regular Test	●	●
		Auto operation LED	●	●
		Manual operation LED	●	●
		Common Shutdown LED	●	●
		Common warning LED	●	●
		Fail to start LED	●	●
		Emergency stop(local)	●	●
		Alphanumeric screen	●	●
		Remote start input active LED	●	●
		Alarm reset	●	●
Measurement and Instrumentation	Engine	Oil pressure	●	●
		Water Temperture	●	●
		Engine Speed	●	●
		Hours Run	●	●
		Number of Starts	●	●
		Battery Voltage	●	●
		Coolant Temperature	●	●
	Alternator	3Phase-L Voltage&Frequency	●	●
		3phase Current	●	●
		Frequency	●	●
		kWh	●	●
		Apparent Power	●	●
		Active Power and Reactive Power	●	●
		Power Factor	●	●
		Per PhasekW, kWr	●	●
		Per Phase kVA	●	●
		Phase Voltage	●	●
		Output Power	●	●
	Mains Expression	Grid Line Voltage	●	●
		Grid Phase Voltage	●	●
		Grid Frequency	●	●
Shutdown Protection and Indication	Engine	Low Fuel Level	●	●
		High Fuel Level	○	○
		Low Oil Pressure	●	●
		High Water Temperature	●	●
		Failure to Stop	●	●
		Failure to Start	●	●
		Controlable start circles/times	●	●
		Overspeed	●	●
	Alternator	Under&Over Voltage	●	●
		Under&Over Frequency	●	●
		Overcurrent	●	●
		Earth Leakage	○	○
		Reverse Power	●	×
		Reverse kWr	●	×
Threshold Warning&Indication		Low Oil Pressure	●	●
		Low Water Temperature	○	○
		High Water Temperature	●	●
		Low Water Level	●	●
		Low/High Battery Voltage	●	●
		Failure to Charge	●	●
		Overcurrent	●	●
		Overload	●	●
		Genset Under/Over Voltage	●	●
		Genset Under/Over Frequency	●	●
		under/over Speed	●	●
		High Engine Temperature	●	●
		Earth Leakage	●	●
Paralleling Capability		Synchroscope(Independent Bus)	●	×
		Active and Reactive Power Control	●	×
		Synchroscope(Shared Bus)	●	×
		Synchronization Dector	●	×
		Peak Lopping	○	×
Power Transfer Function		Automatic Transfer	●	●
		Hard Closed Transition	●	●
		Soft Closed Transtion	●	×
		Gen/Mains Breaker	×	●
		Gen/Mains Breaker Status Protection	×	●
		Speed/Voltage Control	●	×
		Power Indication	●	●
		Fuel&solenoid Valve Control	●	●
		Startor Control	●	●
		Preheating	○	○
		Mains Transfer Switch (Standard)	●	●
		Mains Transfer Switch (Emergency)	●	●
Environment		Operating Temperature (-40℃-70℃)	●	●
		Ambient Temperature (-25℃-45℃)	●	●
		Humidity≤80%	●	●
Monitoring Function		Grid Over/Under Voltage Control	●	●
		Grid Over/Under Frequency Control	●	●
		Remote Start Output(Load/No-load)	●	●
		Optional Relay Output	●	●
		Remote Telecom Control with All Functions	●	●
		Engine Instrument Monitoring	●	●
		Altemator Output Instrument Monitoring	●	●
		Connection Point with All-around Setting For 6 Users	●	●
		3 Users Input Connection Point	●	●
		LCD Light Control of Low Light Operation Environment	●	●
		Safe PIN Code	●	●
		RS232/485 Interface	●	●
		Language Selection	●	●
		Multi-Language Function	●	

● Standard ○ Optional × Impossible

EC Series

GMS800C / GMS800CS

Control System

Digital, intelligent control system allows easier operation.

PLC-8610 (Optional)

PLC-8610 is a microprocessor based control unit containing all necessary functions for protection of the genset and the breaker control. Furthermore, it contains all necessary three-phase measuring circuits and presents all values and alarms on the LCD display. The module has the function of load sharing which enables the module to share the active load (kW) equally when operating in parallel with other gensets. The load sharing is performed so each genset takes a portion of the load that is calculated in percent according to the nominal power.

FEATURES

- Microprocessor control, with high stability and credibility
- Monitoring and measuring operational parameters of the genset
- Indicating operation status, fault conditions, all parameters and alarms
- Multiple protections; multiple parameters display, like pressure, temp. etc.
- Manual, automatic and remote work mode selectable
- RS232 & RS485 can be used at the same time
- Real time clock for time and date display, overall runtime display, 250 log entries

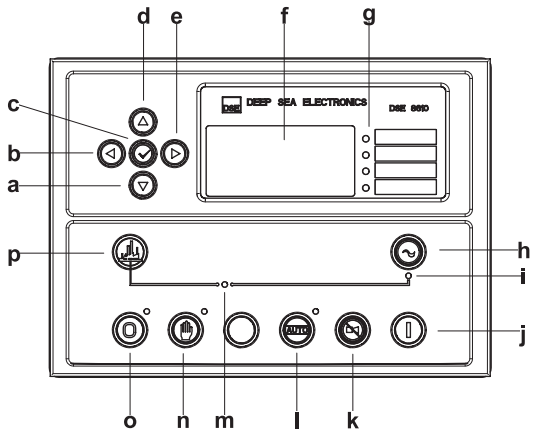

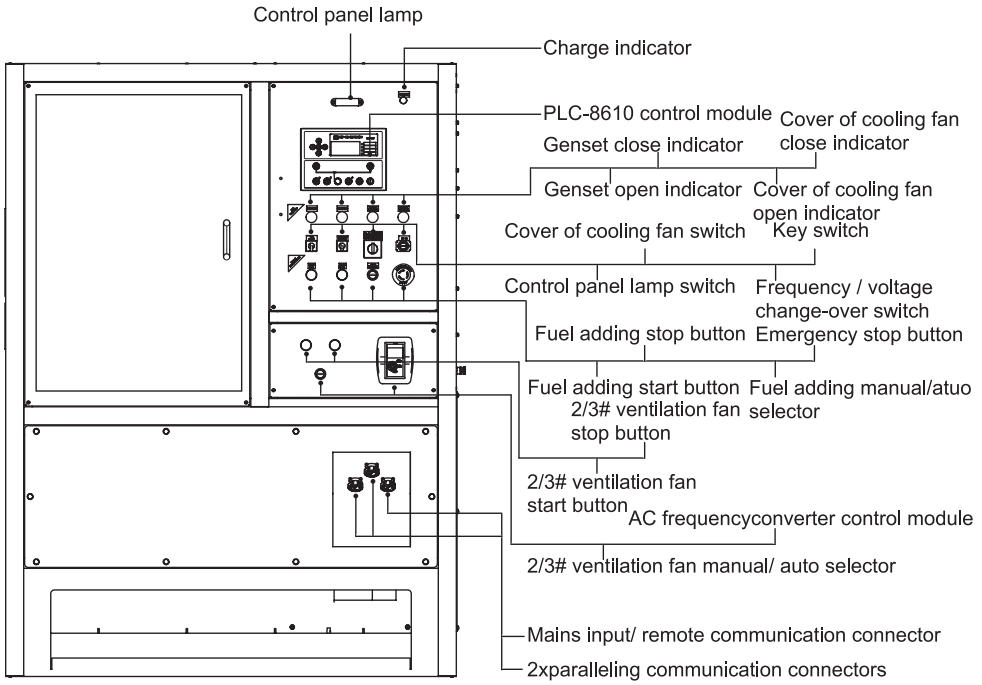

a Decrease value next item
b Previous page
c Accept
d Increase value previous item
e Next page
f LCD display
g Four alarm LEDs
h Close genset
i Genset available LED
j Manual start
k Mute alarm / lamp test
l Auto mode (with LED)
m Genset breaker on LED
n Manual mode (with LED)
o Stop / reset (with LED)
p Open genset

GMS800C / GMS800CS

Optional

Engine	Alternator	Generator Set	Fuel System	Canopy
• Water Jacket Preheater • Oil Preheater	• Winding Temperature Measuring Instrument • Alternator Preheater • PMG • Anti-damp and anti-corrosion treatment • Anti-condensation heater	• Tools with the machine	• Low fuel level alarm • Automatic fuel feeding system • Fuel T-valves	

Lubricating System	Exhaust System	Cooling System	Control Panel	Voltages
• Oil with the machine	• Protection board from hotness	• Front heat protection • Coolant (-30°C)	• Remote control panel • PLC-8610 • PLC-7420 • ATS	• 415/240V • 400/230V • 380/220V • 220/127V • 200-115V

PowerLink reserves the right to make changes in model, technical sepcification, color, configuration and accessories without prior notice. Please contact the salesman before ordering.